CHAPTER 8 D
SCADA System Technical Specifications

CONTENTS

1. PURPOSE OF THE SYSTEM

1.1 Broad Scope

The Supervisory Control and Data Acquisition (SCADA) System covered under this bid, is required to supervise, control and acquire the various specified data from the "Controlled Stations", such as Auxiliary Substations, Switching Stations (FP, SS, SP, SSP etc) along the Line, under JP/EW/1B/E2 contract.

System description
The Power Supply Tele-supervision System SCADA provides the highest level of observation control and command of the Power Supply system. It is the operational nerve centre which allows the personnel in charge of the Operations and Energy management to get a real time status of the installations, to make relevant measurements, and to take the appropriate actions during the normal operation as well as during unusual occurrences when efficiency and swift responses are required.

To achieve this aim, the OCC system shall ensure all the possible facilities to:
monitor the whole line,
help the Operation team to make the most suitable decisions upon occurrence of an untoward incident,
Ensure the transmission of the corresponding controls to the equipment on line.

This function allows the Power Operator to control and monitor the HV (High Voltage), MV (Medium Voltage) and LV (Low Voltage) equipment. The purpose of this function is to manage:
the incoming lines to provide reliable electrical supply to all the equipment,
the Auxiliary power supply sub-stations: transformers from high voltage to medium and low voltage,
the traction power supply sub-stations: transformers from high voltage to 25 kV traction power. The control of the Traction Power shall be done through the Traction Power Supply function.

The Power as a whole is managed from the Operational Control Centre OCC, from where centralised Operation of the line is carried out.

1.2 Interface with other Contractors

The JP/EW/1B/E2 Contractor shall interface with the S&T Contractor who is responsible for providing OFC links between the OCC and other locations, with regard to

Channel requirement
Speed
Protocol
Master Clock requirement at OCC

2. POWER SUPPLY SYSTEM DESCRIPTION

2.1 Power Supply System Architecture

As shown in the block diagram below, the Power System convered in the contract is divided into the following subsystems:

Sub-Sectioning and Paralleling posts (SSP)

At crossovers, junctions or switched overlap, Sub Sectioning and paralleling Post will allow separation of the various adjacent traction subsections and where needed ensure paralleling between the two tracks of a sub section.

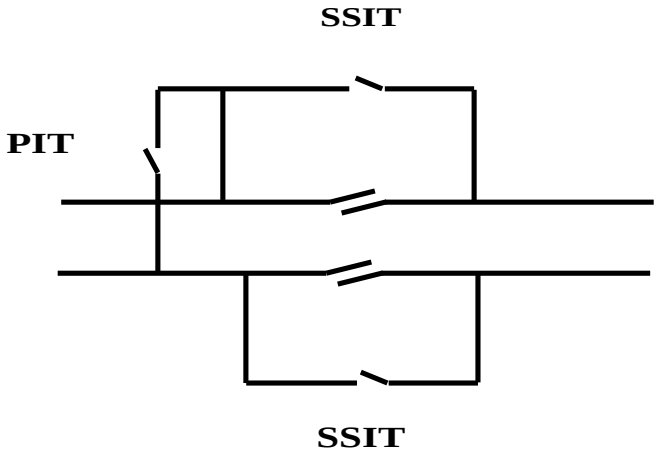

Subsectioning and paralleling Post simplified diagram

For operation purpose, the Traction Line shall be divided into longitudinal OHE sub-sections.

The Sub sectioning Posts ensure this division and where required also ensure the paralleling of OHE sub-sections.

2.1.1 Control of paralleling switches (PIT) or Bridging Interrupters

Automatic opening of a PIT (ring opening) when the tracks are de-energised. This allows rapid troubleshooting by the power operator who does not have to open all PITs one after the other to isolate tracks. Under these conditions, when resetting, it will be possible to locate the fault since the tracks are electrically independent.

2.1.2 Auxiliary substations (ASS)

In addition to the traction network, there is an Auxiliary network as required by all fixed low voltage electrical installations and all fixed electromechanical installations on the Line.

This network is connected to the high voltage Receiving Sub Station by means of medium voltage (33kV) cables, feeding 33000 / 415V transformer stations (ASS).

ASS shall be fed from the Loop of ring main at chand pole, by main 33 kV cables consisting of two cables passing through each substation in 33 kV cable cut-off modes.

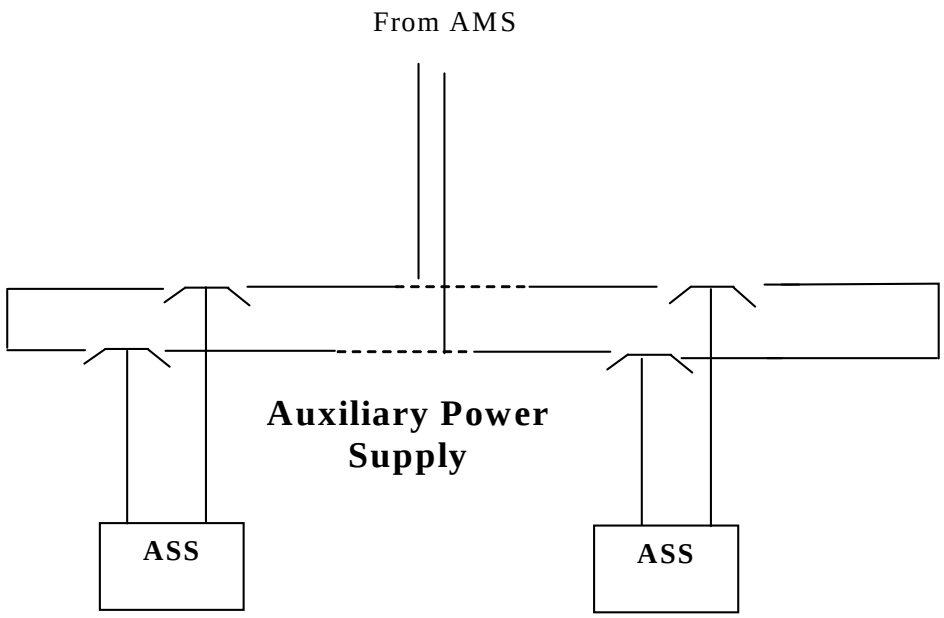

ASS Simplified Diagram

The 33 KV auxiliary Network will be divided into various loops to utilise power from different RSS available in the section.

On the loop only **N-1** switchgears should be active. This restriction is applicable when AMS CB1 and CB2 are closed. Where **N** is the maximum number of switchgear of the loop including the end ones.

If one is close and the other alienated, then all the switchgears of the loop can be closed simultaneously. Closing of all switchgear simultaneously with both CB closed is forbidden.

The 33KV/415 V transformer will be feeding 415 V Bus of MDB Panel via Low voltage switchgears LVCB1, LVCB2 & LVCCB. Power Supply Management
The field of activities of the Power Supply Management team comprises:
- Traction power management at the line side TSS, SSP, SP, FP
- , the Auxiliary power supply management in the stations

The main functions shall be:
- to visualise the condition of the power supply network, as well as the visual monitoring panel,
- to control the pieces of equipment,
- to inform the operator of any change in the status of power supply network,
- to indicate several electrical parameters (voltage, power...),
- to print a pre-determined log of events and data,
- to store log of events.

The Power Supply management can be divided in two main functions:
- the traction power supply management,
- the auxiliary power supply management.

Both of these are under the responsibility of the same Power Operator.

2.2 Traction Power Supply Management

The Power is supplied to the catenary system at 25 kV AC, which is fed directly to the Metro trains.

The power supply is separated between up and down tracks to allow service to run on one track while work is being done on the other.

Basically, the Traction Power Supply Management function allows the Power Operator to energise or de-energise the different Traction Power sections of the line on demand of the Traffic Operator.

The controls related to the Power Supply equipment are performed:
either from the Power Workstation or the Traction Desk,
or locally from the equipment.

The equipment under supervision shall be:
Paralleling and sub-sectioning stations,
Catenary voltage supervision.

2.3 Auxiliary Power Supply Management

Power is supplied to the various types of equipment used in the system, such as:

escalator, elevators,
pumps,
fans, ventilators, air-conditioning,
lighting,
low voltage distribution,
heavy maintenance tools in the depot, etc.

Basically, the Auxiliary Power Supply Management function allows the Power Operator to energise or de-energise the various sections of the Auxiliary Network.

3. RTU REQUIRMENT & EQUIPMENT TO BE CONTROLLED & MONITORED

3.1 Traction Switching Stations

The switching Stations are of the following types namely Sectioning Post (SP), Sub sectioning posts (SS) and Sub sectioning and Paralleling Posts (SSP). RTUs installed in ASS shall collect data from these posts for control and monitoring and transmitting the data to the Main and backup Control centres. No Separate RTU is to be provided; RTU in ASS will house the required I-O modules to cater with requirement of switching section. Automatic Opening of Paralleling Interrupters shall be implemented through ASS RTU only. The detail of signals to be controlled and monitored for the SP, SS & SSPs equipments are given in TS of ROCS Chapter 11.

3.2 ASS at Underground Stations:

The control and monitoring of all the 33 kV feeders catering to the auxiliary power supply on at the Metro underground Stations are categorised under this. RTUs shall be installed at these stations for control and monitoring and transmitting the data to the Main and backup Control centres. The scope of the control and monitoring at these ASS stations include Circuit Breakers on the 33 kV Bus, 33 kV incoming feeders up to the 33 kV /415 V transformers (Transformers included). The details of signals to be controlled and monitored are given in TS of ASS Chapter 8A.

4. SCADA SYSTEM & MAN MACHINE INTERFACE REQUIREMENTS

4.1 Description

The following functionalities are to be achieved by the SCADA system proposed to be installed/integrated at Mansarovar OCC:

Remote monitoring: The remote monitoring functions covers the monitoring of equipment status as per the IO list

Remote control: The SCADA system shall provide facility to open /close the breakers, interrupters etc as per the IO list

In case of an emergency or abnormal situation, the TPC controller shall be able to control the various items of equipment, typically:
Isolation of the faulty sections or circuit
Restoration of the normal configuration after the fault has been remedied.

Tele-measuring: The voltage and currents measurements as per IO list, shall be covered in scope of the RTU. The RTU shall be provided with necessary analogue input modules to receive the 4 to 20 mA signals from the transducers mounted in the Control and relays Panels.

Logics & Interlocking

Transfer, to handle the opening/closing of switchgears in bridges

4.2 Remote Monitoring Requirements:

4.2.1 Process Display & Power Supply Views:

The SCADA software shall be designed with necessary process display screen to provide a graphical depiction of the power supply network for the Rail/Metro Corridor. This shall include the Auxiliary and Traction power distribution..

4.2.2 Network colouring:

The SCADA software proposed shall support necessary bus bar colouring feature by which the dynamic status of the bus bar can be depicted during charged and uncharged condition. The bus bar colouring shall be provided for the ASS over view diagram, Traction Over view Diagram, Traction individual screens.
Follwing Colouring Scheme shall be followed as per existing SCADA logic :

1. Green for Charged section
2. Red for Discharged section
3. Yellow for Earthed Section

4.2.2.1 Auxiliary Network

PTs have been provided at Loop End Stations, The colour of each loop In ASS overview diagram, the bus bar colouring has to be done based on the breakers and isolators status

4.2.2.2 Traction Network

Colouring of Traction Network should be done based on Voltage of Traction Line coming from PTs. PTs are provided in every individual elementary section. When the Voltage of Section is > 18.5 KV, it has to be shown in green colour. When the voltage of section is >7.5 & < 18.5 it should change to Orange colour and when Section voltage is less than 7.5 KV its colour should change to red colour.

4.2.2.3 Equipment other than Battery Charger Colouring

Normally all power equipments reflecting in various screens should be in green colour unless and otherwise any alarm, Blocking and communication Fail event is associated with the equipment. Close and Open State should not be considered as a alarm state for a switchgear and in both cases it should be shown in Green colour. In case of occurrence of other alarms its colour should change to Red.

4.2.2.4 Battery Charger

The status of battery chargers shall be indicated in SCADA as per the following conventions
Green-Healthy and In-service
Yellow-Healthy and Standby
Red-Defective

4.2.2.5 Alarm status

Normally all devices should show in green colour, unless and otherwise any alarm associated with the device appears from field or it is blocked by operator. In case of alarm occurrence colour of device should change to red.

4.2.2.6 Blocking Status

In case of operator blocks control of any device or section, colour of the blocked device should change to brown.

4.2.2.7 Communication Failure

In case of communication failure of a installation, all equipment of the installation should change to pink colour.

4.2.3 Event management

The SCADA system shall collect the operator's request and field information changes. Any change on the field or any operator request shall be processed as an event. The SCADA system may generate additional events resulting from the processing of the filed information and/or operator request. All events processed by the SCADA system shall generate an update of the related dynamic display objects and also be recorded in logging list. The logging list shall contain all the events in chronological order that occurred within a certain period of time. All the events shall have a time stamping of 1 msec. Furthermore, alarm types events shall be recorded in the alarm list and generate an alarm procedure initialisation.
The event Logging System of SCADA system shall support the following features and options:

- Historical Storage of events with facility to retrieve the same later
- Configurable layout: columns, fonts, toolbars, Colouring, and so on.
- Configurable scrolling behaviour
- Configurable presentation modes: log mode /event mode, latest at top/bottom
- Updating/Frozen presentation modes.
- Easy navigation through scrolling, go to date, time filters.
- Filtering (By Station, Device, and Period etc.)
- Extensive filtering that can be stored and easily called up later

- Find, Sorting by column, Copy/Paste of events to other windows application
- Printing
- Commenting of events by operator

4.2.4 Alarm management

An Alarm is an important event that the operator needs to be informed of immediately so that prompt corrective action may be implemented to ensure the operational safety and integrity of Power Supply .High priority visual and audible warnings appear on the current operator work station and an acknowledgement request is made to ensure that the operator has received the alarm information. Alarm may result from field information changes or from processing of field information, operator and system actions. Alarms may be configured as major and minor alarms

The SCADA system shall be able to handle various types of alarms, typically:

- Alarm generated due to change in field information.
- Alarm generated due to fault in SCADA system equipment and communication link.

4.2.4.1 Alarm procedure

The purpose of the alarm procedure is to draw the operator's attention and ensure that the information is taken into consideration, whatever activity being performed when the procedure is initiated. The alarm procedure shall generate a specific visual effect and audible warning on the operator work station. The activation of the audible warning shall be configurable for major alarms. It shall be possible to disable the audible alarms. Alarm procedures may be generated in the following cases:

- Alarm appearance
- Alarm disappearance

Alarm appearance procedure:
Any change from "normal" to "alarm" value of a alarm shall be considered as an alarm appearance event and shall generate an alarm procedure.
Alarm disappearance procedure:
Any change from "alarm" to "normal" value of a alarm shall be considered as an alarm disappearance.

4.2.4.2 Alarm list

All alarm appearance events shall generate a record in the alarm list. The alarms can be removed from the Alarm List if

- Alarm is not present any more,
- Alarm has been acknowledged by the operator.

Alarm disappearance events, which generate an alarm procedure, shall also generate a record in the alarm list. This record shall only be erased by the SCADA system when the concerned operator has acknowledged the alarm disappearance. All alarms which appear in the SCADA screen shall be logged in the Log mode and shall not be erasable.

4.2.4.3 Audible warning cancellation

The possibility of implementing an "audible warning cancellation" facility shall be provided. When an alarm procedure has been initialised, this facility shall allow the operator to stop the audible warning prior to alarm acknowledgement. The audible warning cancellation shall have no other consequence on the alarm procedure (the

visual warning shall remain until alarm acknowledgement) and shall not interfere with the management of the alarm list.
Any new alarm procedure after the audible warning cancellation shall reset the audible warning.

4.2.4.4 Display of Alarms and Events

The digital inputs signals being monitored by various RTU shall be categorised as P0, P1, P2 & P3 categories. The method of configuration for these alarms shall be as below:

P0 (events)
P0 category signals are non severe signals that need not be configured as alarms. These are to be stamped in event list only.

P1 (Alarms and events)
P1 category signals also fall under non severe category but which requires attention of operator from the process point of view.The same shall be configured as visual alarms.

P2 (Alarms & Events)
P2 alarms are used for major and critical alarms that require acknowledgement from the operators and shall be attended so that the system can operate / function smoothly. These are to be configured as alarms & events. Audible alarms are required to be configured for this category signals.

4.3 Remote Control Requirements:

4.3.1 Automatic / Manual control

It shall be possible to control the breakers and interrupter via Operator request or via automatic control procedures. The control functions shall be Close/Open of the equipments as per IO Lists. The operator initiated Open/Close control functions shall be possible using Select- Check – Execute sequence.

4.3.2 Control command Logging

The SCADA system shall log the control operations by the operators in the event list so that any closing opening other than issued by the operator from SCADA can be differentiated from the Event list.

4.3.3 Permissive for Local Operation:

In order to facilitate local maintenance of the equipments and to prevent unauthorised local operations, Permissive for Local operation shall be provided for each equipment so that the field operator can carry out operation of the power equipment only after the above permission is granted from the Control Centre. SCADA system should ensure that no operation is performed without permission from Operator..

4.3.4 Remote control inhibition management-Alienation of a Power Supply Equipment

The operator at Mansarovar OCC shall be able to inhibit /block the control from SCADA system. This blocking action shall be available in the blocking list. The control inhibition/ control blocking shall be possible individually for each equipment being processed. The operator shall be possible to cancel the blocking also. The user performing the blocking / deblocking shall be logged in the event list. The blocking and deblocking actions shall be available in the SCADA system in the form of blocking list:

Identification of the blocked equipment, status of equipment when it has been alienated, time of blocking

The details of the user /operator who have carried out the blocking action shall also be logged in the Event List in the SCADA system.

4.3.5 OHE isolation

For the protection of maintenance works, the Traction Power Controller may set the isolation of any OHE subsection of the line. Such action shall involve opening of a group of interrupters in the elementary sections of the Traction Line. The menu provided in SCADA for OHE Isolation shall have a drop down list for selection of elementary sections to be isolated. Once the operator selects the elementary section and select the button to start the isolation, the SCADA system shall trigger an automatic control procedure which will initiate the opening command from the SCADA to the respective BMs. The isolation action by the operator shall be logged in the Event/Alarm list with details of user as well as time of action. It shall be possible for the operator to close the BMs from the SCADA system subsequently through normal control function. It should be possible to cancel the isolation of an elementary section.

4.3.6 Level of Control

The following levels of controls should be possible

a) Centralised Control from Main control centre- Mansarovar OCC.
b) Local mode from the equipment

4.3.6.1 Centralised control from Main or Backup Control Location

4.3.6.2 *The control shall be possible as default design from the Main control centre OCC at Mansarovar Depot Area.* Local mode from the equipment:

It shall be possible to operate the equipments locally from the control panels by selecting the local / remote selector switch in Local Mode and after taking the SCADA permissive from the OCC. This selection shall be logged by SCADA in the event list.

4.4 Tele Metering

The SCADA system at Mansarovar OCC shall display and log the analogue parameters from the SCADA system as per the IO list for SCADA. n

4.5 Logics & Interlocking

4.5.1 Control of paralleling switches (PIT) or Bridging Interrupters

Automatic opening of a PIT (ring opening) when the tracks are de-energised. This allows rapid troubleshooting by the power operator who does not have to open all PITs one after the other to isolate tracks. Under these conditions, when resetting, it will be possible to locate the fault since the tracks are electrically independent.

4.5.2 Interlocking scheme:

For safer operation interlocking has to be implemented in SCADA system. The following interlocks mainly to be provided.

a) Breaker-Isolator interlocking – It should not be possible to operate Isolator when the corresponding breaker is in Close condition and breaker operation should not be possible when isolator is in open condition.

b) 33 KV Network Inter Loop-interlocking: - When Potential Transformer of adjacent loops is showing voltage, Extending power from one loop to other should not be possible.
c) Interlocking at SPs: - When Potential Transformers on both sides of SP is showing voltage, Extending power from one section to other should not be possible.
d) **(N-1)** interlocking in a 33 KV Network Loop .

4.6 Operation Aids

4.6.1 Log-on / Log-off:

4.6.1.1 Log-on

Before commencing work on a workstation, operator identification to the system shall be required. Log on window with password protection shall be provided for the purpose. After suitable display prompts the operator shall enter his name, password, and validate them, system access shall be granted to the authorised sessions.

4.6.1.2 Log-off

The operator shall log off to end the active working session on a workstation.
After the current operator has logged off and with no other operator logged on, no supervisory, control, monitoring or other action on the SCADA system shall be possible from the workstation.

4.6.2 Reporting

The SCADA software shall support configuration of time related measurement reports Measurement Report is used within SCADA's library applications for various types of time related reports, such as hourly, daily, weekly, monthly and yearly reports. The reports shall be based on time-related follow-ups of process, metered, entered or calculated data. The data for the reports shall be stored in real time. Report data is collected and calculated cyclically or triggered by events. The most common method is to fetch raw data from the process, and thereafter to scale and store it in the report database. All the events/reports are shall be automatically written in text files and stored on hard disk in the reports folder of the application. Periodic back ups of reports shall be possible

The Measurement Reports supports the following time related reports:

- Hourly report (time resolution: 3 minutes)
- Daily report (time resolution: 15 minutes)
- Daily report (time resolution: 30 minutes)
- Weekly report (time resolution: 1 day)
- Monthly report (time resolution: 1 day)
- Yearly report (time resolution: 1 month)

Printers that are connected to the Master Stations shall be used for printing of reports. Automatic periodic printing of reports can be configured for the Master. On demand printing of reports shall also be possible.

4.6.3 Trends

The SCADA shall support trends for performing time related follow up of process data. The trends shall be possible for both digital as well as analogue parameters. The trend shall support a maximum of 10 trend parameters. The trends shall be possible in both graphical and tabular forms which shall share the same database.

The x- axis and y-axis of the graphs shall be configurable in scale. It shall be possible to have different scan time variable in single display. The trend display shall support the following features:

- Support of Graphical or tabular view modes with zooming facility
- Shall support Scrolling with scroll bars and panning
- Configurable axes, line properties and legend
- Update interval options from 30 seconds to 10 minutes
- Trends for Calculation formulas; direct, mean, sum and difference shall be possible
- Shall have Printout option
- Depiction of Update/Frozen modes
- Facility to Copy to clipboard and export to CSV File

4.7 Man-Machine Interface

The energy supervision shall be carried out by means of the Visual Display Panel and the Workstations. The Visual Display Panel which will receive the single line diagram of traction and auxiliary supply, shall be a monitoring device only. It shall reflect the drawing showing General Feeding arrangement.

The workstation functions described here after shall offer monitoring and control possibilities.

4.7.1 Work Station overview

The SCADA man / machine interface shall be through the following:

1 SCADA workstation 1

The Two workstation for the SCADA control in the OCC operations room shall be each composed of single screen with a single keyboard and pointing device. The keyboard shall be able to select different views of power equipments for monitoring purposes.

4.7.2 General concept of the workstation screens

The display of views, controls and the event resolution shall be possible from the same screen.

The screens shall be organised into different sections for processing the operator activity information. There shall be no overlap between the various sections at any time that may obscure vital information.

The active sections shall have dynamic information displayed. Each active section shall manage and update the alarms, processing and controls that shall be displayed in it. Every status change shall be shown within the active sections and the relevant display updated.

Each view shall display the necessary tools and options for the processing or management of events.

Hourly and daily programming tools, which allow the completion of automatic reports according to the option chosen by an operator, shall be provided.
Any section of the screens displaying text shall have scrolling abilities. The management of any overflows of alarms and various data, i.e. when the number of alarms exceeds the capacity of the section on the screen, shall use these scrolling facilities.

One pointing device shall be provided for all screens. This device shall allow working on both screens by simply moving the device, without any additional action. This arrangement shall allow the operator to view the two screens as a single control screen.

4.7.3 Typical Workstation screen design

4.7.3.1 Alarm List (AL)

The alarm list may show detailed alarms in comprehensible text format with the date and time of their occurrence. They shall be displayed in chronological order, commencing with the most recent.

A scrolling facility shall enable the operator to scan the list.

Each alarm in the list shall be displayed with different colour or shape attributes according to the alarm level and acknowledgement status.

The alarm list shall have various filter facilities to enable the operator to display different format of events.

The operator shall be able to print the alarm list.

4.7.3.2 Logging List (LL)

The logging list shall show detailed events in comprehensible text format with the date and time of their occurrence. They shall be displayed in chronological order.
A scrolling facility shall enable the operator to scan the list.
The logging list shall have various filter facilities to enable the operator to display different format of events.
The filter keys shall typically include:

- location
- equipment group
- time period
- event category (ordinary event, minor and major alarm …)
- other options

Any combination of the filter keys shall be possible.

Each event in the list shall be displayed with different colour attributes according to their category

- event class as in clause of this chapter
- Operator or system action

The operator shall be able to print the logging list or the filtered logging list.

4.7.3.3 View Selection

A view selection bar may be permanently displayed on each screen to allow the operator to select various available images.
Some detailed images may not be selectable from the view selection bar but be selected directly from other displays.

4.7.3.4 Graphic Display

The graphic display shall display images as requested by the operator.

4.7.3.5 Control facilities

Equipment control may be managed by designating the equipment on the screen. This action may open a dialogue box requiring the operator to select:

- one possible control mode for the equipment
- setting remote control inhibition on the equipment
- cancelling remote control inhibition on the equipment

After selecting the control action, the operator shall either validate or cancel the action.

If validated, the control action shall be performed.

4.7.4 The various views of the System

4.7.4.1 Typical Traction Sectioning Overview

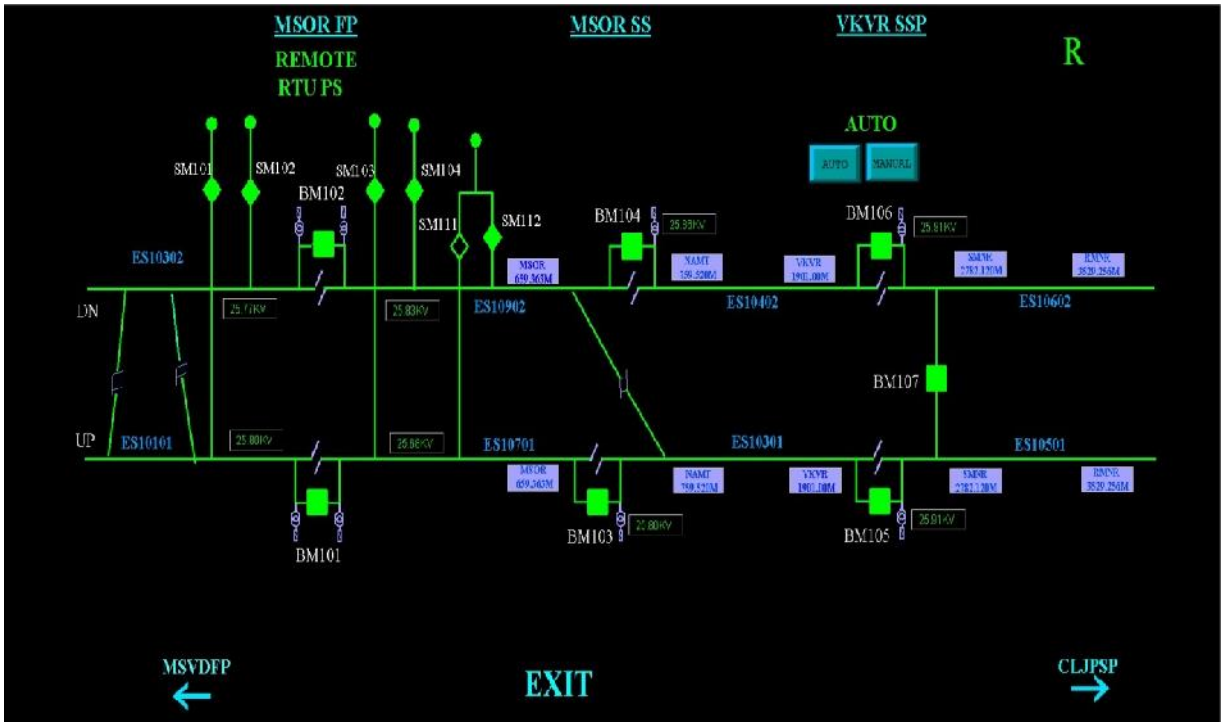

4.7.4.2 Typical Auxiliary Substation View

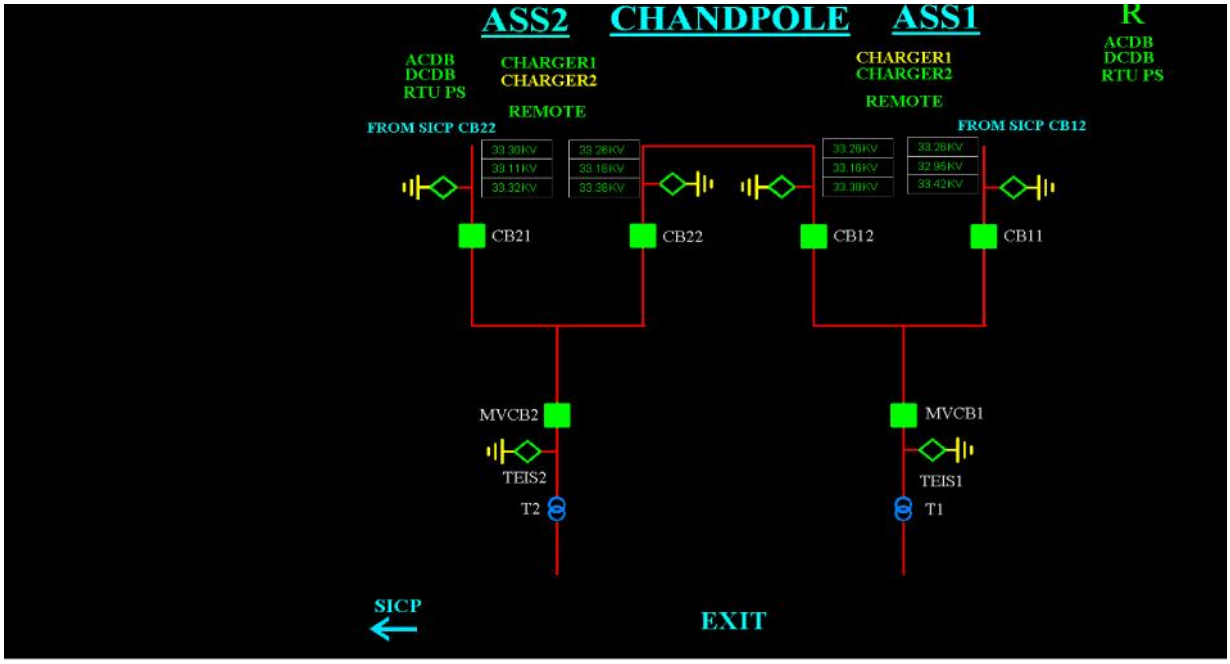

4.7.4.3 Typical Auxiliary Network View

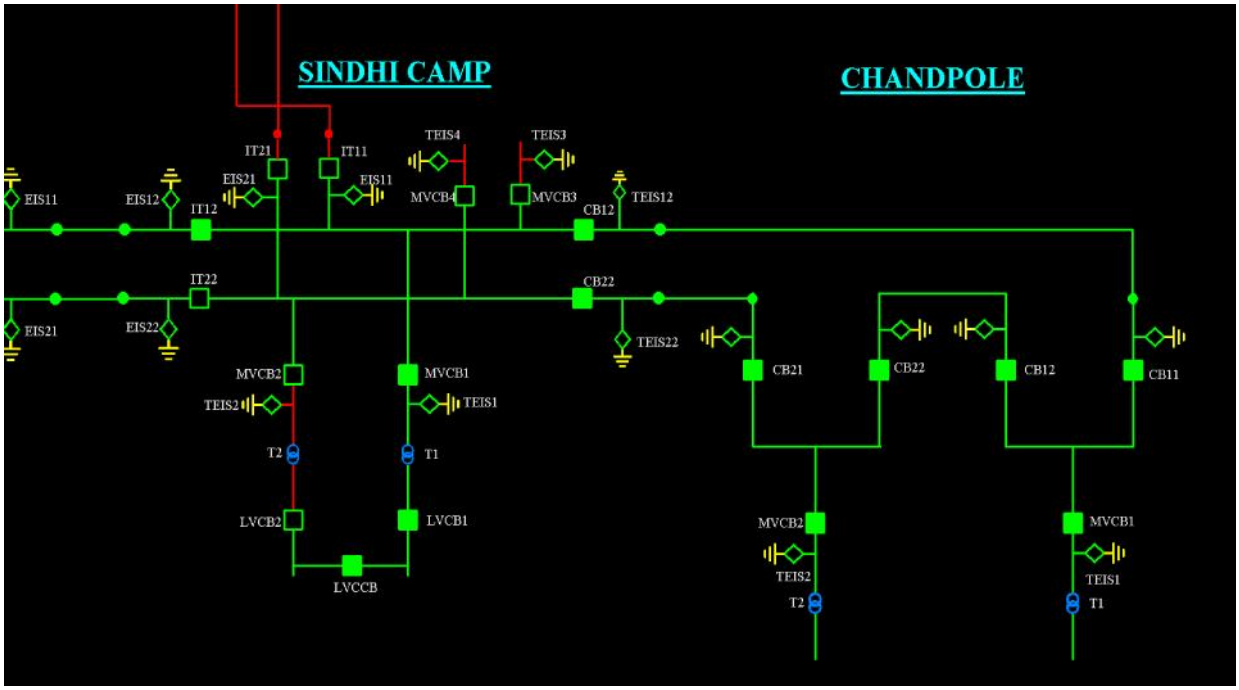

5. SCADA SYSTEM REQUIREMENTS:

The SCADA system acquires data from the RTU installed at various locations via Data Transmission network:

5.1 Data transmission network :

It picks up data also called the Remote Monitoring on site, i.e. ASS, SSP and brings them to OCC Data Processing system. On the other direction, all the operator's instructions are sent to the remote terminal units by means of Remote Controls.

5.2 Data Processing system :

The RTU installed at the ASS, OHE posts will act as the data processing equipments. These RTUs acquire the process information and transmit the same to the Control Centers.

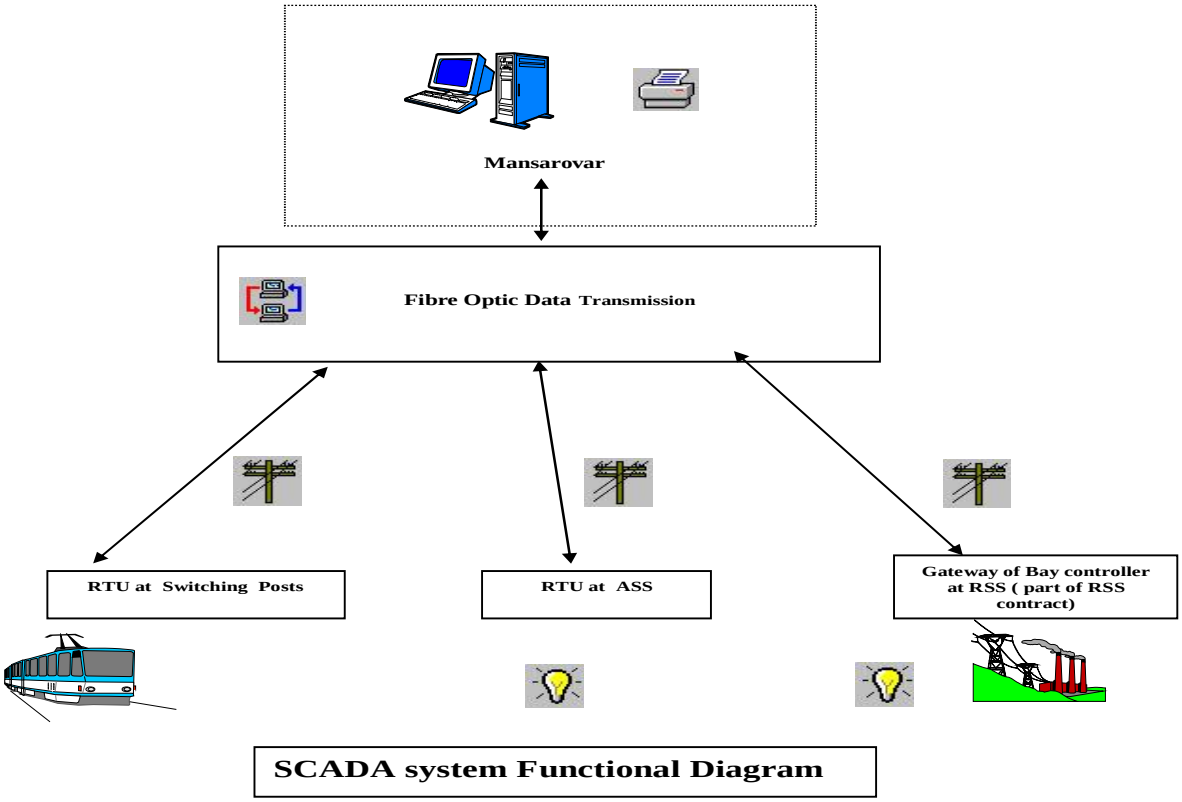

5.3 Communication Protocol:

The SCADA system shall support the following communication protocol

IEC 870-5-104 / for communication with the RTUs

5.4 Time synchronisation

The Time synchronisation system required at Mansarovar OCC will be made available by the other agency. Bidder shall interface with the agency for GPS signal for time synchronization. The new servers can acquire the time synch messages from the LAN via NTP protocol. The SCADA servers will be synchronised with the GPS Master Clock which in turn will synchronise the RTU with the required design periodicity.

Apart from periodically synchronising the RTUs, the SCADA servers will synchronise the RTU during start-up or after recovering from communication failure.

5.5 Communications

5.5.1 FO Communication network

The RTU shall communicate with the Control centre via Fibre optic network installed by the communication contractor. The FO terminal equipment will have required ethernet ports to interface to the RTU. A group of RTUs adjacent to the ASS stations shall be multi dropped and terminated to the FO equipment in TER room. The Main and redundant RTU shall be multi dropped in different channels. Each RTU shall have three ports terminated to the equipment. Two channels for data communication with the Control centres and one channel for Remote Downloading from the Main Control centre.

5.5.2 LAN Network at Control centre:

The SCADA servers and workstations that would be supplied at Mansarovar OCC shall be interconnected using redundant Ethernet switches. The Ethernet switches shall have necessary ports to hook up the new servers and workstations.

5.6 Performance requirements

The performance of the system must enable the operators to operate the line under satisfactory conditions. More precisely, the following targets must be reached:

5.6.1 Transfer time

The time required to transmit the status information and alarms at the SCADA system within 2 seconds. The sequent of events information which are mainly for analysis purpose and is stored in RTU memory can be polled at a lesser priority.

5.6.2 System Capacity

The new SCADA servers that are to be installed at the Mansarovar OCC shall be suitably sized to handle data communication up to 225 RTUs in one set of redundant servers.

6. EMERGENCY TRIP SYSTEM (ETS)

The RTUs installed at Underground ASS stations shall provide necessary interface to the Emergency Tripping system.

The Emergency trip system (ETS) will implement an electrical tripping scheme to de-energize relevant OHE sections during emergency conditions. **ETS shall cover the underground section of OHE only**. ETS will comprise emergency trip stations connected through cables to programmable logic controllers (ETS PLC). Every emergency trip station will consist of a unit with robust fire protected cover having breakable seal to contain a plunger switch with tripping contact, a blue location – indicating light and provision to contain a heavy-duty telephone handset. The emergency trip stations will be provided and installed at the following locations for UP/DN line separately. Details of ETS specifications provided in clause 10 of chapter 8A of TS ASS.

a) Close to the cross passages in each tunnel
b) Ends of platform
c) Station Control Room (SCR)

7. I-O REQUIREMENTS

The I-O requirements for RTU's located at various Power Supply installations are listed in TS of ROCS Chapter 11 for switching post equipments and TS of ASS Chapter 8 A for ASS equipment. The requriements shown are only tentative and the minimum requirement. The Contractor shall provide adequate number of I/O cards to cater to the acutal requirements of I-O Signals and the required spares (Spare card of each type utilised for the SCADA system should be made available by the contractor. The manufacturer of the SCADA cards should provide the replacements/updated version of the SCADA control cards).

8. TECHNICAL REQUIREMENTS OF SCADA SYSTEM

8.1 DESIGN CRITERIA FOR SCADA SYSTEM

The SCADA system proposed shall be a proven system based on Windows platform in line with the existing JMRC system and shall have reference installation in India and Abroad specifically in Metro Railway Traction Power Control Applications. The product shall have windows look and feel and shall support the features listed later in this chapter.

The SCADA system vendor shall have the necessary domain experience in implementation of the complex functional requirements for the Traction Application.

9. The Detailed Technical Specifications For Each Of The Components In The Proposed Scada System Shall Be As Specified Below.System Architecture

The system architecture for SCADA system to be installed as part of this Contract shall be as below. The contractor shall assess the site conditions before submission of the proposal to Employer/Engineer. For new section under this contract a Central Control Station, hereinafter referred to as **Operational Control Centre (OCC) will be established in the Mansarovar Depot**.

COMMUNICATION INTERFACE

The SCADA servers shall communicate with the RTUs via IEC 870-5-104 protocol.

The servers shall be connected to the OLTE equipment installed at Mansarovar OCC via IEC 870-5-104 interface. Necessary redundancy switches shall be provided by the bidder.

The Redundant Ethernet switches for networking the servers and workstations and existing systems shall be considered in the scope.

9.1 **COMMUNICATION MEDIUM**

The Control and Monitoring System covered under this Bid, is required to supervise, control and acquire the various specified data from the 'Controlled Stations' along the Line, such as Auxiliary Substations, Traction and Auxiliary Networks, Metro Stations, Switching Stations (SP, SSP etc) along the Line, etc. The SCADA at OCC Mansarovar Depotwill communicate with the RTUs via Fibre Optic Link. The necessary communication channels, which shall be in the form of Optic Fire Cable (OFC), will be provided by some other Agency, between the OCC and the Telecom Equipment Room at Stations/. The cables required for connection between the RTU at the station ASS's and the Telecom Equipment Room and SCADA Room and Telecom Equipment Room at Mansarovar Depot will require to be supplied and installed by JP/EW/B1/E2 Contractor.

10. TECHNICAL SPECIFICATIONS FOR REMOTE TERMINAL UNITS

The RTU proposed shall be modular in nature and scalable upto maximum of 2000 data points. The RTU shall support distributed processing intelligence with decentralised structuring with the task of preprocessing of inputs distributed to the IO modules.

The detail of I-O requirement for RTU is given in Chapter 8A for ASS and in chapter 11 of TS rigid OHE (ROCS). RTU shall be further capable of incorporating +10 % increases in I-O requirement. The RTU shall support the following technical features which are very critical for ensuring the functional requirements for a critical application like Metro Railway Traction Power Control.

10.1 CENTRAL PROCESSING UNIT

The Central processing unit shall have minimum 32 bit microprocessor and shall have a dedicated peripheral bus controller for handling the IO functions. The CPU module shall have non volatile memory. It shall have necessary ethernet ports for communication with atleast 3 control centers i.e. 1 control centers presently and 2 control centre in future on IEC 870-5-104 protocol. The RTU shall support synchronization with relays at ASS or Switching posts on MODBUS/IEC 870-5-103 protocol on one port and the same shall be sent to OCC on IEC 870-5-104 protocol . The RTU shall have one MMI port which can be used for configuration purpose.

10.2 TIME SYNCHRONISATION

The accuracy and resolution of the time stamping is very critical for analysing the events that occurs across various stations. To achieve this, RTU should be provided with clock which shall support time synchronisation from master station via periodically initiated synchronisation messages of communication protocol. The SCADA system shall also initiate Time Synchronisation messages when the communication with the RTU is restored after a communication failure. RTU shall be provided with dedicated back-up power for clock, so that in the event of RTU getting off due to power failure, the clock shall be updating the time.

10.3 COMMUNICATION WITH MASTER CONTROL CENTRE

The RTU shall be provided with necessary Ethernet ports for interfacing with the OLTE equipments which will be installed at the various ASS stations. The OLTE equipments will be available at the ASS stations. The RTU installed at the nearby locations(Depot FP) to the ASS stations has to be multidropped on an Twisted Pair Shielded, Armoured FRLS Low smoke Halogen Free 16 core (8 pair) cable and terminated to the Ethernet interface available on the TER room at the stations. The average distance between the locations which would be multidropped on the electrical cable would be an average 600 meters. The cables required for multidropping the RTUs and terminating at the OLTE equipments would be in the scope of the SCADA vendor. The MMI programming port of the nearby RTUs shall also be multidropped and terminated to the OLTE equipment for termination to the OCC for remote programming facility (Refer Fig 1).

10.4 REMOTE PROGRAMMING FACILITY

The RTU shall support remote programming facility using RTU programming utility software from the Master Control centre. The MMI port on the RTU shall be terminated to the Master Control centre via one communication channel. The MMI

ports of nearby RTU shall be multidropped on a Electrical cable and terminated at the OLTE room at the ASS stations to facilitate Remote programming facility:

10.5 I/O MODULE SPECIFICATIONS

10.5.1 DIGITAL INPUT MODULE

The Digital input module shall have 16 optically isolated channels per modules and shall support time stamping with time resolution of 1 ms. The digital input module shall support configuration of inputs for the following options:

- Single Indications
- Double Indications
- Digital Measurands

The digital input module shall support the following features:

Programmable parameters like

- Bounce Filter (Suppression Time)
- Settling time for reliable digital measured value
- Chatter suppression
- Suppression of intermediate position
- With / Without time tagging shall be a configurable feature
- Configurability of message transmission priority

Indication processing of

- Group or Common alarms shall be configurable from Individual alarms by Boolean operations
- Acquisition of events in chronological order with a time resolution of 1 ms
- Buffering upto 3 changes per input

10.5.2 ANALOGUE INPUT MODULE

The Analogue inputs module shall have 8 channels per module and shall support Dual Slope integration A/D conversion. The Analogue module shall support the following features

- Unipolar Measured values
- Bipolar measured Values

Programmable parameters like

- Live zero conversion coefficient
- Cyclic Transmission or threshold value
- Forced zero pint conversion coefficient
- Limit Values
- Smoothing factor
- Threshold values
- Cyclic duration
- Priority of Transmission

Other parameters:
- Inputs shall be configurable for 4 to 20 mA / bipolar or live zero

- Accuracy - </= 0.1 %
- Common Mode Voltage : +/- 8 V DC
- Line Interference suppression : > 100 d for fn = 50 or 60 Hz

10.5.3 DIGITAL OUTPUT MODULE

The Digital Output module shall support 16 digital output channels per module. The output module shall support the following features

Programmable Parameters shall includes

- Duration of Output Pulse
- Release disconnection delay time at response indications
- Select before execute
- Cyclic duration
- Priority of Transmission

10.5.4 REDUNDANCY

The RTU offered for the ASS, Traction & Receiving Substations shall be duplicated in all respects of CPU, IO cards & power supply. Two sets of Main & redundant RTUs, Both shall communicate with the Master Control centre on two different communication channels.

10.5.5 PLC PROGRAMMING FACILITY

The RTU has to program for several logic functions which are required for the metro power supply distribution application. Hence the RTUs offered shall support PLC programming facility as per IEC 61131-3 standards. Necessary programming tool shall be offered.

10.5.6 TRANSDUCERS

The RTUs will acquire analogue signals like voltages and currents from the transducers via 4 to 20 mA analogue inputs. The transducers would be supplied by the SCADA vendors.

10.5.7 RTU & MARSHALLING PANELS

The RTU panel which houses RTU hardware mainly consisting of the CPU & IO racks & power supplies, Interface converters etc shall be of IP54 protections class for ASS Station.

10.5.8 ENVIRONMENT CONDITIONS

The RTU hardware shall meet the following environmental requirements:

EMC Immunity: As per IEC 60870-2-1 Level 3 or 4
EMC Emission: As per IEC 60870-2-1 Class A
Temperature : -10 to 55 deg C as per IEC 80870-2-2
Humidity : 5 to 95% as per IEC 80870-2-2

10.5.9 ANALOGUE SIGNAL MEASUREMENT

The RTUs will acquire analogue signals like voltages and currents from the transducers via 4 to 20 mA analogue inputs. The transducers would be supplied by the SCADA Venders.

11. SCADA SYSTEM

The architecture for the SCADA systems at OCC is as shown in figure 1 and 2 respectively.

11.1 SCADA HARDWARE REQUIREMENTS

The SCADA System at OCC shall preferably be integrated with the existing SCADA system at OCC, Mansarovar Depot, already provided by ABB. If the same is not feasible the bidder may bid for an independent SCADA System as detailed below:

The detailed specifications for the servers, workstations, printers etc proposed at the Control centers shall meet atleast the functional requirements mentioned in this chapter. The SCADA system at Main Control Centre shall be based on Hot Standby system with redundant LAN configuration. The Servers at OCC shall be terminated to the Fibre Optic terminal equipments via Ehernet. The hardware supplied for the SCADA system shall consist of all necessary hardware for networking LAN between the servers and workstations, redundancy switches and converters required for interconnecting the Ethernet ports of the servers to Fibre Optic Line Terminal Equipment. The OLTE will be provided with necessary Ethernet ports for termination to the servers.

The SCADA software proposed for the Metro application shall be based on windows operating system. The SCADA system architecture shall consist of the following:

2 SCADA servers in redundant configuration for SCADA functions with single 17 inch TFT Monitors
2 Nos of SCADA workstations with Single 19 inch TFT monitors.
1 No of Engineer workstations with 19 inch TFT monitor.
Video wall integration workstation
Dual LAN network equipment.
Interfacing equipment as required.
Printers - A4 size Laser jet printers (B/W and color) – 1 No each.
Furniture for SCADA System as per Clause 11.4 of TS

TIME SYNCHRONISATION
The SCADA servers shall be synchronised with the GPS Master Clock provided by S&T via NTP protocol. Acquiring Master Clock time sync form S&T vide LAN shall be in scope of SCADA vendor.The SCADA system shall be synchronised with all the RTUs via fibre optic communication medium.The SCADA system shall issue time synchronisation messages to the RTUs at regular periodicity that shall be configurable. The time synchronisation messages shall also be initiated by the SCADA before start of communication or when the communication with the RTU is restored after failure. When communication with an RTU is interrupted, all data from that RTU shall be marked with invalid time till the time synchronisation with the RTU is established again.

11.2 Communication with RTU

The RTU will be connected to the OLTE equipment using star network. The RTU shall be fitted with necessary converters for termination to the OLTE equipments. Redundancy switches and converters required for interconnecting the ethernet ports of

the SCADA servers to Fibre Optic Line Terminal Equipment shall be considered in the scope of the SCADA system. The OLTE will be provided with necessary Ethernet ports for termination to the servers.

11.3 FURNITURE

The contractor shall consider suitable and aesthetically designed furniture at Mansarovar ECC to house the new servers and workstations . The servers have to be housed in separate cabinets to prevent from dust and there should be easy access for the cables.

11.4 SCADA SOFTWARE

The technical features of the SCADA software shall meet the following minimum technical features:

11.4.1 PROCESS DISPLAYS

The SCADA software shall support flexible process displays for continuous & effective monitoring of power supply network of the Metro Railway

The process display feature shall facilitate depiction of Single Line Diagrams with flexible choice of colours for the process objects and backgrounds. The Process Displays shall support zooming & panning facility. The process display features shall be flexible enough to build the complete Traction network and the auxiliary network as a single Mimic Display with facility to navigate using mouse from one end of the network to the other. It shall also be possible to zoom portions for picture for getting a magnified view of the Single Line Diagram.

11.4.2 ALARM MANAGEMENT

Alarm Management System to alert operator & maintenance staff during equipment malfunctions or any other system alarms likely to cause disruption to operation of the railways. The alarm management function shall support

- Two types of Alarm List templates
- User-friendly filters, Alarm List setting tool for Colours and text layout
- Updating/Frozen presentation modes
- Alarm acknowledgement, Alarm reset function
- Authorization support
- Help in all dialogs
- Visible Alarm Class
- Locate Object
- Column sort, Find, Fields indicating the number of active and unacknowledged alarms
- Field indicating the use of filters
- Field indicating the current presentation mode
- Current/total page number indication on both lists

11.4.3 EVENT LOGGING SYSTEM:

Event Logging System for displaying and logging sequence of event recording with 1 millisecond resolution for the various field inputs configured at the RTU. The Event List contains the following features and options:

- Historical Storage of events with facility to retrieve the same later
- Configurable layout: columns, fonts, toolbars, Colouring, and so on.
- Configurable Colouring of events

- Configurable scrolling behaviour
- Configurable presentation modes: log/event order, latest at top/bottom
- Updating/Frozen presentation modes
- Easy navigation through scrolling, go to date, time filters, and so on.
- Extensive filtering that can be stored and easily called up later
- Find, Sorting by column, Copy/Paste of events to other windows applications
- Printouts
- Commenting of events by operator

11.4.4 MEASUREMENT REPORTS

The SCADA software shall support configuration of time related measurement reports Measurement Report is used within SCADA's library applications for various types of time related reports, such as hourly, daily, weekly, monthly and yearly reports. The reports shall be based on time-related follow-ups of process, metered, entered or calculated data. The data for the reports shall be stored in real time. Report data is collected and calculated cyclically or triggered by events. The most common method is to fetch raw data from the process, and thereafter to scale and store it in the report database. All the events/reports are shall be automatically written in text files and stored on hard disk in the reports folder of the application. Periodic back ups of reports shall be possible

The Measurement Reports supports the following time related reports:

- Hourly report (time resolution: 3 minutes)
- Daily report (time resolution: 15 minutes)
- Daily report (time resolution: 30 minutes)
- Weekly report (time resolution: 1 day)
- Monthly report (time resolution: 1 day)
- Yearly report (time resolution: 1 month)

Printers that are connected to the Master Stations shall be used for printing of reports. Automatic periodic printing of reports can be configured for the Master. On demand printing of reports shall also be possible.

11.4.5 TRENDS

The SCADA shall support trends for performing time related follow up of process data. The trends shall be possible for both digital as well as analogue parameters. The trend shall support a maximum of 10 trend parameters. The trends shall be possible in both graphical and tabular forms which shall share the same database. The x- axis and y-axis of the graphs shall be configurable in scale. It shall be possible to have different scan time variable in single display. The trend display shall support the following features:

- Support of Graphical or tabular view modes with zooming facility
- Shall support Scrolling with scroll bars and panning
- Configurable axes, line properties and legend
- Update interval options from 30 seconds to 10 minutes
- Trends for Calculation formulas; direct, mean, sum and difference shall be possible
- Shall have Printout option
- Depiction of Update/Frozen modes
- Facility to Copy to clipboard and export to CSV File

11.4.6 CONTROL FUNCTIONS

The SCADA system shall support control function based on automatic & manual control of power and traction equipment. The manual control of equipments shall be possible using select- check- execute sequence. The open/close function for the operator control action shall be possible to be passed through protective interlock functions.

11.4.7 SAFETY TAGGING

The SCADA software shall support the feature of safety tagging upto atleast 2 levels by the addition of note marker. The note marker shall be inserted into any of the pictures and shall be saved even on the condition of change over. The operator shall be able to give some specific instructions to the shift operator using this functionality.

11.4.8 BLOCKING LIST

The SCADA software shall support feature of Blocking List which shall depict the blocking status of update, Control, Alarm and event for the various data base points along with the name of the Signal text used in the SCADA system.

11.4.9 BUS BAR COLORING

The SCADA software proposed shall support necessary busbar coloring feature by which the dynamic status of the busbar can be depicted during charged and uncharged condition. The bus bar coloring shall be provided for the ASS over view diagram, Traction Over view Diagram, Traction individual screens.

12. UNITERRUPTED POWER SUPPLIES & AUXILLIARY POWER SUPPLY DISTRIBUTION

The UPS supply shall be tapped from exixting (UPS) Auxiliary Power Supply Distribution Board in SCADA room at OCC Mansarovar Depot. The contractor shall interface with existing SCADA vendor, if required. The tapping of power supply shall be in scope of JP/EW/1B/E2 contractor. The JP/EW/1B/E2 contractor shall provide Auxiliary Power Supply Distribution Board etc required for distribution of supply to its SCADA system.(Additional DB shall not be required in case of intergartion of new section in existing SCADA system provided at OCC, Mansarovar Depot.

13. VISUAL DISPLAY PANEL

The JP/EW/1B/E2 Contractor is required to integrate new sections in existing large screen visual display panels to show traction and auxiliary power supply network of all the lines in real time mode. Additional interface workstation and other peripherals required for integration shall be in scope of JP/EW/1B/E2 contractor. Design, supply, installation testing and commissioning of this system is within the responsibilities of the JP/EW/1B/E2 Contractor.

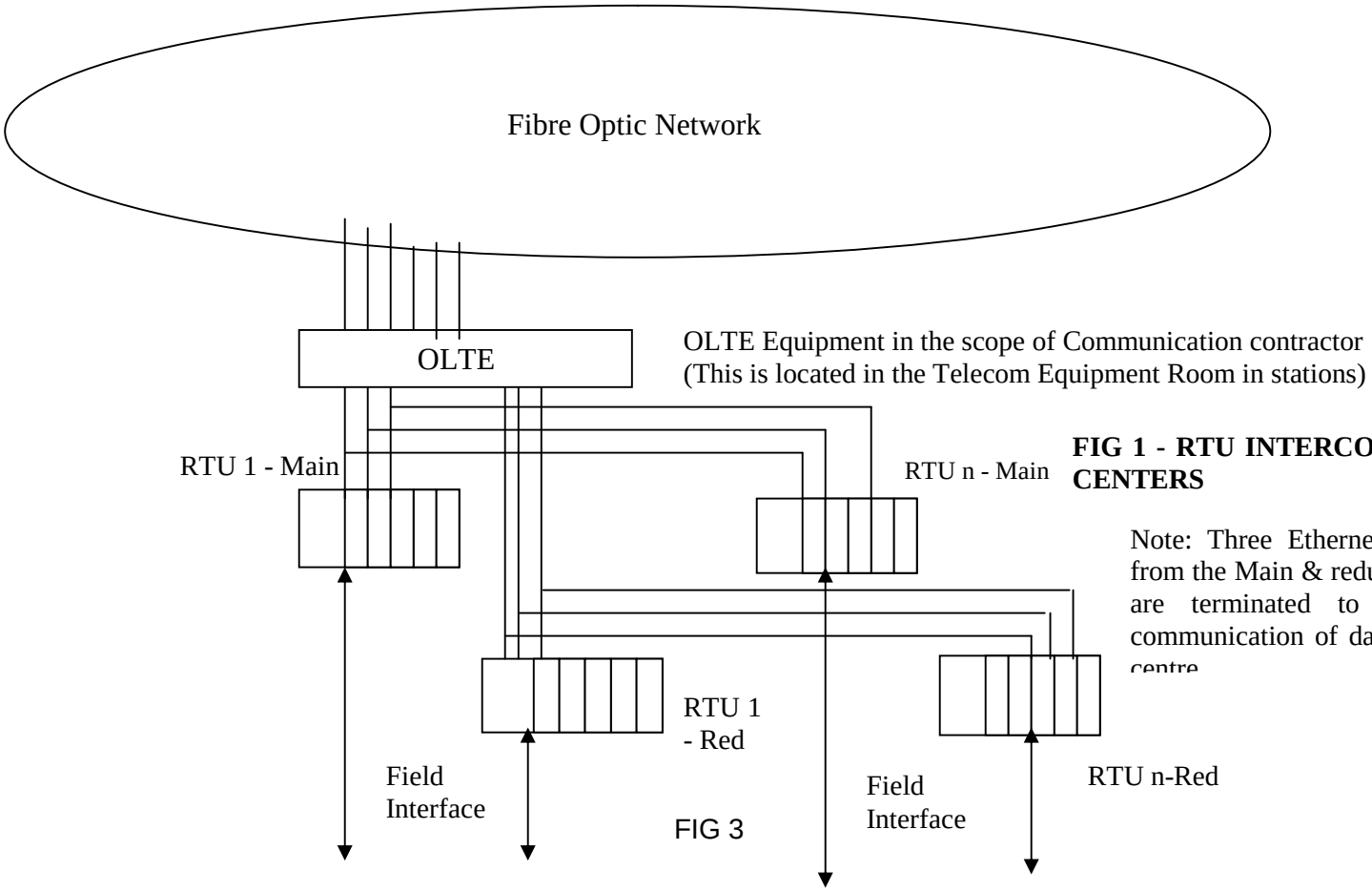

FIG 1 - RTU INTERCONNECTION T CENTERS

Note: Three Ethernet links each from the Main & redundant RTUs are terminated to OLTE for communication of data to control centre